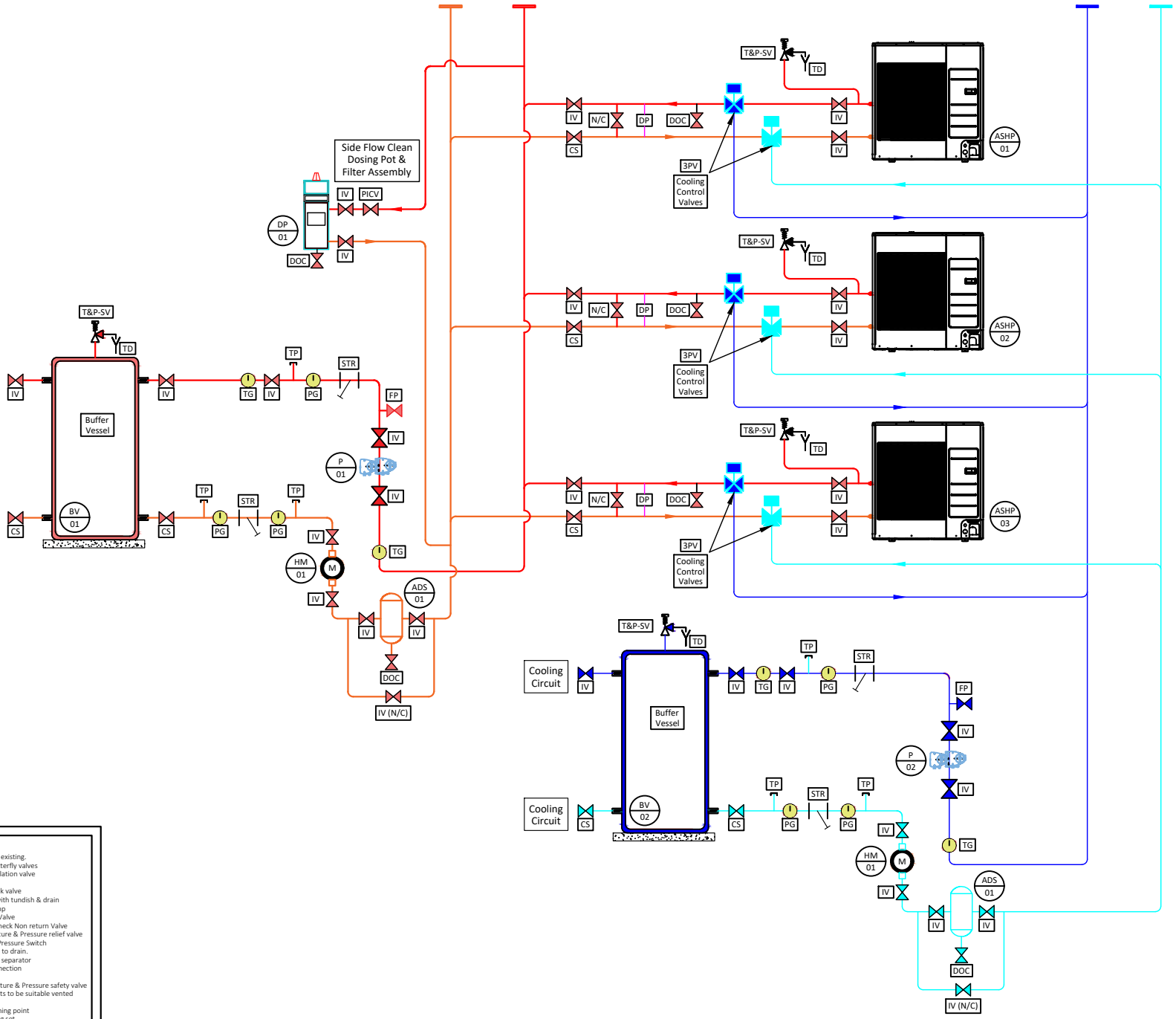

KEY:

IV = Isolation valve existing.
BV = Ball Valve/Butterfly valves
DRV = Double regulation valve
DOC = Drain cock
DCV = Double check valve
SV = Safety valve with tundish & drain
P = Circulating pump
NRV = Non return Valve
DCNRV = Double check Non return Valve
T&PRV = Temperature & Pressure relief valve
DPS = Differential Pressure Switch
TD = Tundish run to drain.
D&AS= Dirt and air separator
FC = Flexible connection
ST = Strainer
T&P-SV = Temperature & Pressure safety valve
All high & low points to be suitable vented and drained.
FP = Ball valve flushing point
CS = Commissioning set

ESS
ENVIRONMENTAL SITE SUPPLIES
53 STONECOT HILL,
SUTTON, SURREY,
SM3 9HJ
www.essaircon.com
T: 0845 880 5862
E: info@essaircon.com

CDM - DESIGN RISK INFORMATION

Residual Risks which we have not been able to design out and which others could not be reasonably expected to know about.

RISK DETAIL & STAGE	SUGGESTED CONTROL MEASURE	DESIGNER

No.	Description	Date

MAXA GAMMA
i-290 HEAT PUMPS

CASCADE
HEATING AND COOLING

Project number	
Date	09/07/2023
Drawn by	ESS
Revision	

ESS/MAXA 007

Scale	NTS @ A3